Drought Tolerant Maize For Africa Project

The Challenges:

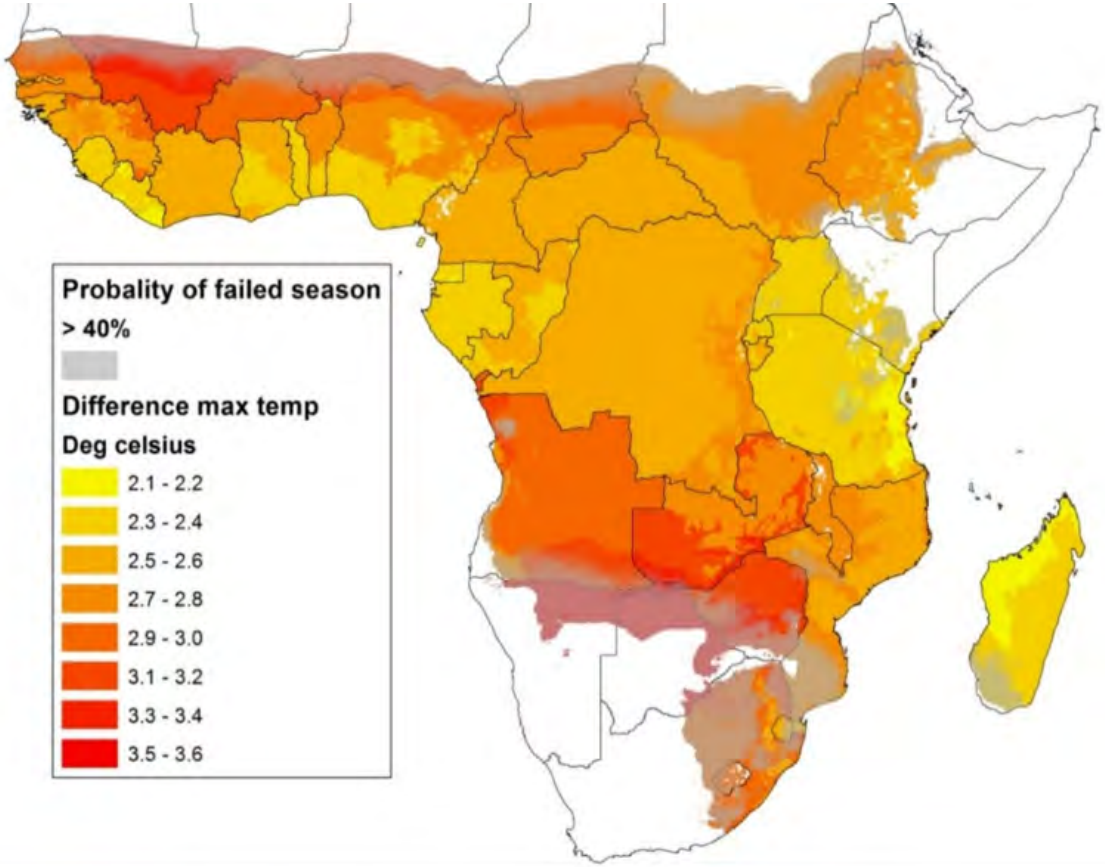

Cairns et al., 2012; 2013

Breeding for Drought Maize

Post-flowering drought stress

- **Top left:** time of last irrigation
- **Top right:** crop after flowering
- **Right:** genotypic differences

Improving Precision in Phenotyping

New Technologies for Phenotyping

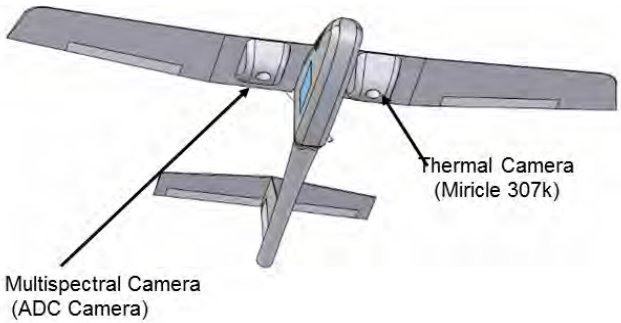

Unmanned Aerial Phenotyping Platform

Improving precision in phenotyping

Drought stress phenotyping

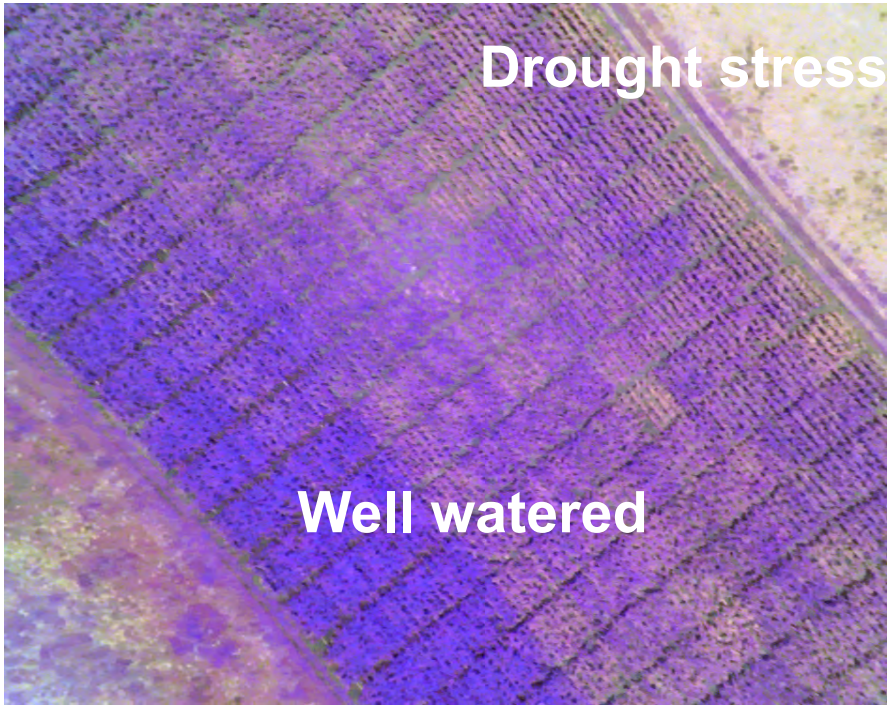

NDVI

Leaf senescence

Gains through conventional breeding

	Managed drought		Optimal	
Pedigree	GY (t ha-1)	Anthesis (d)	GY (t ha-1)	Anthesis (d)
CZ0517/CZL04021//CML181/CZL01005	2.30	92.6	8.11	65.6
CZL9817//CML441/CML442	2.11	88.5	8.08	63.5
PAN 53	1.79	93.3	8.89	65.7
SC513	1.02	91.9	6.85	64.1
SC533	1.94	90.5	8.36	63.2
Mean	1.72	88.3	7.41	62.4
No. of locations	20	20	26	26
H	0.62	0.87	0.91	0.88

But are these yield gains maintained in farmers fields under farmer management?

On-farm trials

- 49 trials in farmers fields
  - Ethiopia, Kenya, Tanzania, Malawi, Mozambique, Uganda, Zambia and Zimbabwe
- 20 entries
  - 9 new “drought tolerant” hybrids, 5 new “drought tolerant” OPVs, 5 commercial hybrids and 1 farmers own variety)
- Farmer management
- Farm = replicate

On-farm trials

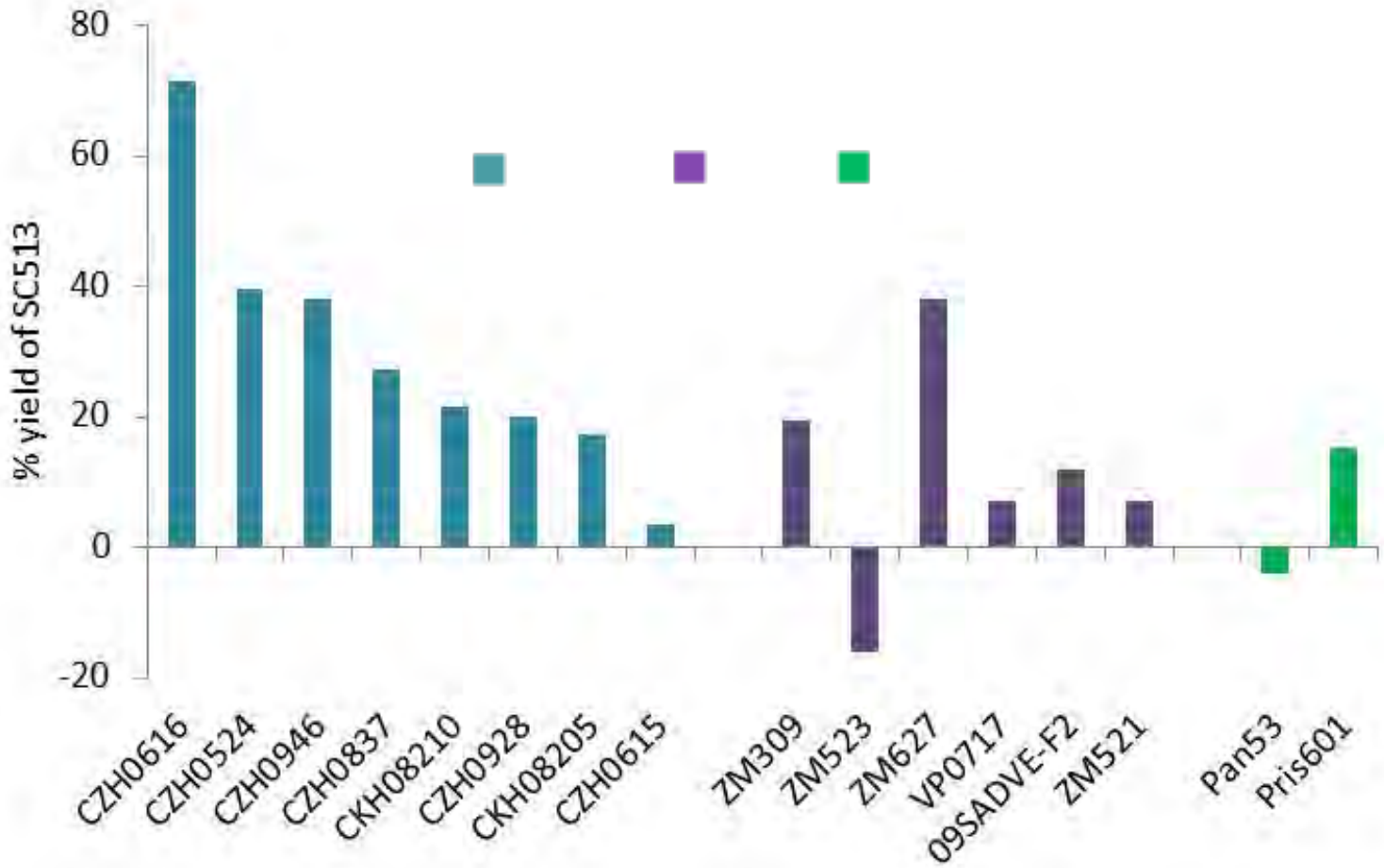

- Under low yielding conditions (< 3 t ha-1) the best new hybrid (CZH0616) out-yielded SC513 by over 70%
- Under high yielding conditions (3-8 t ha-1), CZH0616 out-yielded SC513 by 35%

Adaptation to Climate Change – Integration of Climate-smart Technologies

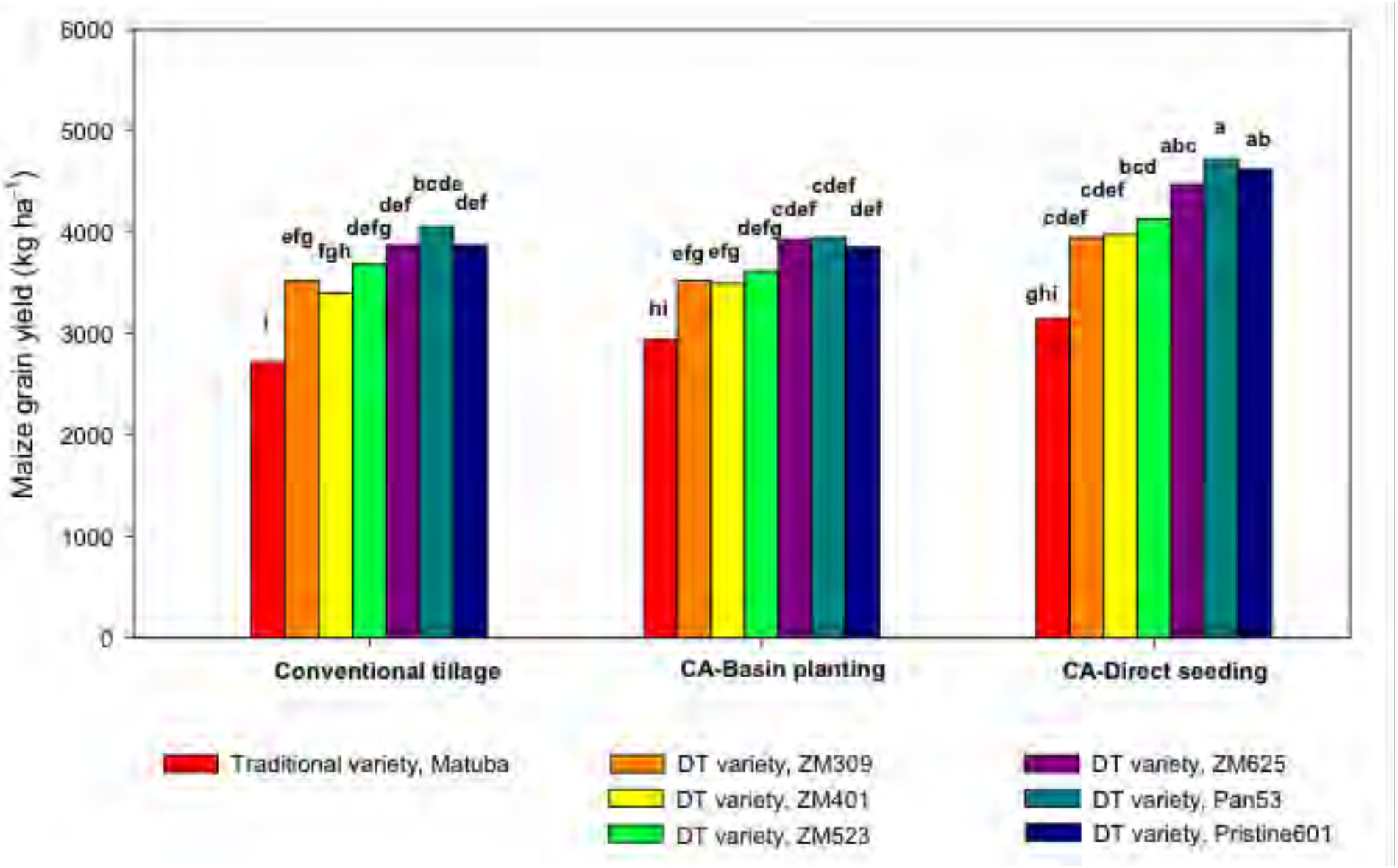

Seed Dissemination Targets

Country	Amount of new DT Seed in ZOI**				
	2015	2016	2017	2018	2019
Ethiopia	300	550	850	1,200	1,600
Kenya	400	700	1,000	1,300	1,600
Uganda	400	700	1,000	1,400	1,800
Tanzania	500	900	1,200	1,600	2,000
Zambia	400	800	1,000	1,300	1,600
Mozambique	450	600	750	1,100	1,400
Malawi	500	700	1,000	1,200	1,500
TOTAL	2,950	4,950	6,800	9,100	11,500

ESA Variety Releases 2014

Country	Name	CIMMYT Code	Institution
Ethiopia	MH140	CZH0837	EIAR
Ethiopia	BH546	Combination	EIAR
Ethiopia	BH547	Combination	EIAR
Kenya	WE1101	CIMMYT-WEMA	AATF
Malawi	MH30	CZH0713	Maize Research
Malawi	MH31	CZH0819	Maize Research
Malawi	MH32	CZH0829	Maize Research
Malawi	MH34	Combination	Maize Research
Malawi	MH35	Combination	Maize Research
Malawi	MH36	Combination	Maize Research
Mozambique	Gogoma	ZM309	IIAM
Mozambique	Moz-Pristine-1	CIMMYT	Moz Seeds
Mozambique	SP-1	CIMMYT	IIAM
Swaziland	CZH0623	CZH0623	Malkerns Research
Tanzania	NATAH104	CIMMYT	Aminata
Tanzania	NATAH105	CIMMYT	Aminata
Uganda	Victoria H1	CIMMYT	Victoria Seeds
Uganda	Victoria H2	CIMMYT	Victoria Seeds
Uganda	WE2115	CIMMYT-WEMA	NARO
Uganda	WE2116	CIMMYT-WEMA	NARO
Uganda	TBA	CKH10769	NARO
Uganda	TBA	CKH10692	NARO
Uganda	TBA	Combination	NARO

The floods

Promoting Variety Adoption

- Variety Demonstrations conducted widely
- Field days by seed companies
- Posters and seed packaging
- Still much to be done to increase demand

Maize Demonstration Plot

Demonstrations

- 240 established
- 233 survived

- Crop Management
  - Convention plots
  - Conservation Agriculture

- Maize varieties from
  - Peacock
  - Demeter
  - CPM
  - Funwe

DT Seed Production

Country	No.
Angola	2
Ethiopia	5
Kenya	7
Malawi	7
Mozambique	5
Tanzania	5
Uganda	7
Zambia	5
Zimbabwe	8

- There are 51 companies in ESA on the list of DT variety producers, of which 44 are producing pure CIMMYT DT varieties
- Feedback from 26 companies, estimates made for 18 companies. Estimates make up 22 % of total reported production.
- 2014 production figures for ESA as at 22 Sept.:

NEW DT			OLD DT		NEW DT	
Hybrid	OPV	Total	OPV	Total CIMMYT	Combination Hybrids	Total DT
9244	6964	16208	2285	18493	5211	23705

USAID FROM THE AMERICAN PEOPLE

FEED THE FUTURE
The U.S. Government's Global Hunger & Food Security Initiative

Conclusions

New drought tolerant maize varieties have been developed which significantly out yield current varieties under farmer management

Given the time from development to dissemination we need to ensure yields under drought conditions will be maintained in future environments

Drought tolerant varieties alone will not necessarily translate into yield gains in farmers' fields

BILL & MELINDA GATES foundation

CIMMYT

IITA Research to Nourish Africa

Africa RISING